ARCNET®.

The universal, realtime capable fieldbus solution

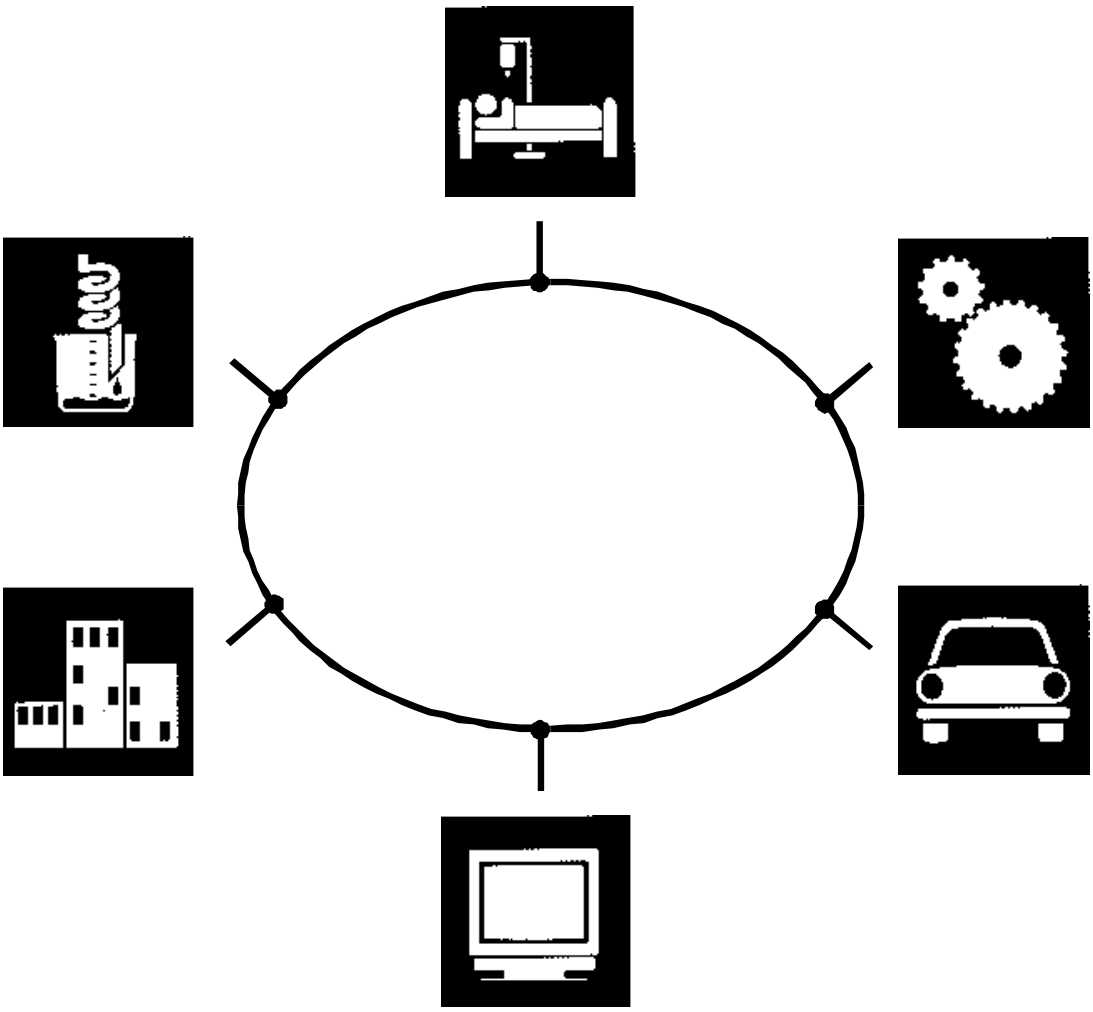

Take the lead with **ARCNET !**

CONTENTS

1 ARCNET, the universal, realtime capable Fieldbus Solution

With ARCNET the market offers a fieldbus solution with numerous benefits which supply the user with powerful and inexpensive solutions for fieldbus applications.

These benefits include the following features:

- Realtime Capability by Token Passing technology, this results in computable response times
- Safety due to checksum in the data packet and handshake protocol between transmitter and receiver
- Protocol is implemented within a single chip for low cost applications
- Simplicity, because OSI layers 1 and 2 are implemented in hardware
- Flexible network topology, bus-, tree- and star topologies are possible and may be randomly combined
- Flexible use of media, coax-, twisted pair- and fibre optics can be combined
- Huge network extent at standard baud rates, at reduced the baud rate even more extendable
- Automatical logon and logoff of participants, the network automatically integrates new stations into the ring or logs them off
- Variable packet length between 1 and 508 data bytes
- Master – master access, the node which has the right to send is master
- Variable transfer rates between 30 bps and 10Mbps
- High efficiency, up to 71% of datarate as data channel

2 History

ARCNET has been developed in the USA by Datapoint and successfully used in the office LAN field.

With an originally fixed transfer rate of 2.5 Mbps, ARCNET was pushed out of office LAN applications by the faster competitor Ethernet. For office applications the fast transfer of a large amount of data is the primary goal and not the realtime capabilities of the network. Just this ARCNET property is the major interest for industrial applications.

SMC has introduced a family of ARCNET controllers to the market which is designed for the use in fieldbus applications and for internal networking within units especially. These circuits are used in large quantities in very different fields of application. In the meantime ARCNET became one of the most popular network solutions for industrial purposes.

3 Characteristics of modern Fieldbusses

Modern manufacturing processes require machinery and installations of increasing capabilities and complexity. The number of system components in use is increasing. For the communication between the components a fieldbus is used as a network for the industrial environment.

Primary technical properties of fieldbusses are:

- Topology
- Bus access management
- Physical properties
- Transmission protocol
- Bus access management within multimaster systems
- Transmission security
- Overhead
- Real Time behaviour
- Economical and strategical aspects

These items are first discussed in general and then detailled for ARCNET.

3.1 Topology

There are three different basic topologies:

3.1.1 Bus

An example for the bus topology is shown below. Fieldbus nodes are connected to every bus segment in parallel. In every fieldbus the segment length depends on the transmission media and the number of the connected clients. The total length can be extended by using repeaters. A repeater (amplifier with in- and outputs) regenerates and amplifies the signal on the bus.

The bus segment is terminated at both ends with resistors.

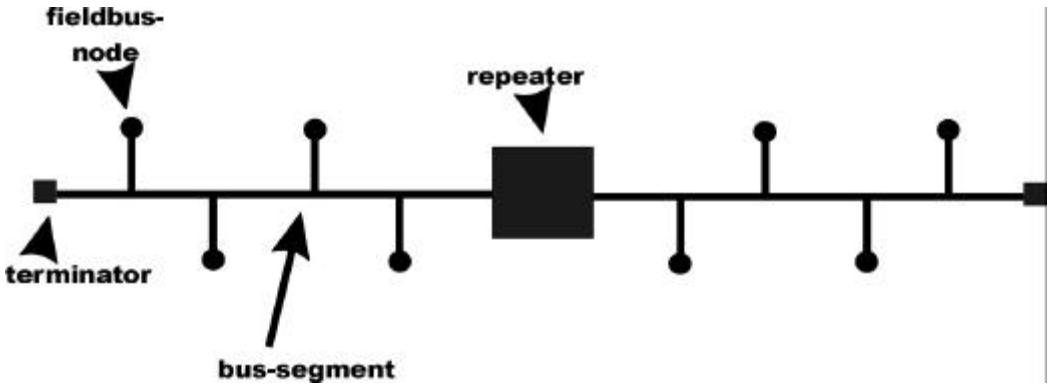

3.1.2 Star

In the star topology every segment only supports one node.

Central point is a HUB (amplifier with up to 10 in- and outputs) which also contains the termination resistors.

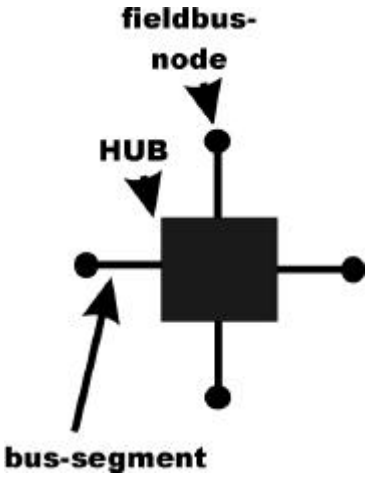

3.1.3 Tree

The tree topology is a mixture between bus and star. These can be randomly combined via HUBs.

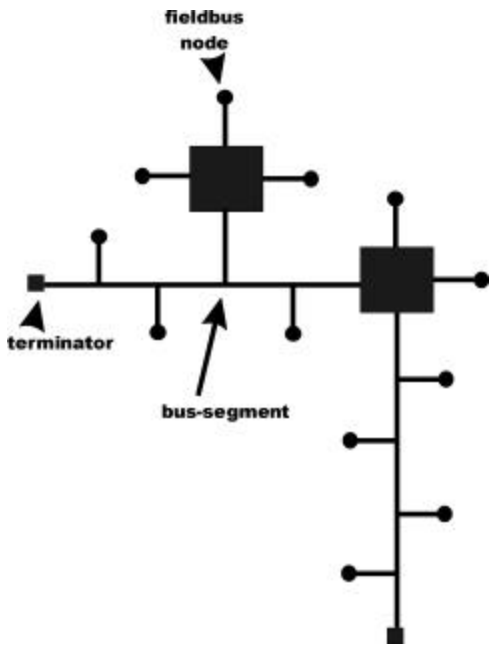

3.2 Bus Access Management

- Systems with centralized Bus Access Management

One participant works as a master and controls the arbitration of the bus. This makes sense for applications, which are based on a system manager with high performance centrally distributing tasks and managing the information flow. The guaranteed access time can be configured individually for each participant. The availability of the hole system depends on the master.

- Token Passing Method

A participant is allowed to access the bus as soon as it receives the token. The token is passed to the next participant after the action has been completed. Every participant of the system takes part in the communication process as a master according to a predefined timing grid. There is no preset information flow. A maximum access time can be calculated (deterministic system). The hole system does not depend on single participants.

- Free Bus Access

There is no preset order for bus access. Every participant can try to access the bus at any time. Collisions that may occur must be avoided by the "Carrier Sense Multiple Access" method or corrected by the "Collision Detect" (CD) method. Compared to deterministic systems the free bus access method allows higher data throughput rates for applications with low bus load. However access times cannot be guaranteed. Such a system has no predictable realtime capabilities. At higher bus loads the bandwidth for data transmission decreases rapidly due to collisions.

3.3 Transmission Protocol

The different layers in industrial automation lead to different requirements for the fieldbus.

- Operation Layer, Control Layer

Few participants (operation terminal, control terminal) communicate via LAN at high throughput rates. File transfer is emphasized. The LAN has to be optimized for *high data rates* and *large data packets*.

- System Layer, Process Layer

Cell computers and micro programmable controllers (PLC's) are connected. The number of participants is greater than in the higher layers. Both, file transfer and byte oriented data transfer is needed. Often deterministic realtime behaviour is required.

- Sensor- /Actor Layer

A large number of sensors / actors is connected to the. Only small numbers of bytes are transmitted.

3.4 Transmission Integrity

In fieldbus systems, there are high demands regarding data integrity. The common security mechanisms are CRC (cyclic redundancy checksum) and parity checking.

3.5 Physical Interface

- Coax Cable

supports huge network extension, is easy to install and meets the electromagnetic compatibility requirements.

- Twisted Pair Cable

is the most common wiring type used for fieldbusses. It meets the electromagnetic compatibility requirements, often based on *RS 485 Transceivers*.

- Optical Waveguide (OWG)

ensures high data integrity and data rates, however, limitations in terms of topology (mostly star) and handling have to be accepted. The electromagnetic

behavior is excellent.

3.6 Implementations

In fieldbus solutions usually only OSI layers 1 and 2 are implemented. Layer 7 directly communicates with layer 2

There are various possibilities for the implementation of fieldbus solutions:

- Software Implementation

Parts of layer 1 and 2 are implemented as software. Microcontrollers are used. With fieldbusses of higher performance this solution exhausts the available microcontroller resources or the use of expensive microcontrollers is required.

- ASIC Implemention

Layer 1 and 2 are implemented as an ASIC. The computing power of the CPU can be exclusively used by the application. The user does not have to deal with fieldbus protocol details.

4 ARCNET

Below the specific ARCNET features are discussed.

4.1 Topology

ARCNET is one of the few networks that can be used with every topology.

Bus-, star- or tree topologies as well as combinations of these can be used. Therefore ARCNET supports a wide range of applications.

4.2 Bus Access Management

ARCNET uses the *Token Passing* method.

Every participant is assigned a unique number (ID) between 1 and 255, no ID may be used twice.

The token is passed to the node with the next higher number independently from the network topology. The token allows the participant to access the network for transmitting one data packet of variable length (1-508 bytes). After a completed transmission attempt the token has to be passed to the next node whether the data block has been sent successfully or not.

At any time it is possible for a participant to leave or to enter the logical ring of the token passing network.

The access method ensures equal availability of the network for all connected nodes.

4.3 Protocol Components

It is important for the understanding of the following chapter (network access sequence) to explain the basic elements of the low level ARCNET protocol, which are used for the physical layer of data transmission.

These protocol components are invisible for the user because they are part of layer 1 which is implemented in hardware.

There are five different protocol elements. The Alert Burst, which consists of six consecutive bits with the value 1, precedes all ARCNET packets. The header for every transmitted byte of data is represented by a 110 bit combination.

- **ITT** - Invitation to Transmit

ITT is the token which is passed from one node to another node.

Alert Burst	ITT	DID	DID

- **FBE** - Free Buffer Enquiry

FBE serves as query to initiate a data transmission to another participant.

Alert Burst	ENQ	DID	DID

- **PAK** - Data Packet

PAK performs the transmission of a data packet.

Alert Burst	PAK	SID	DID	DID	COUNT	SC	DATA // DATA	CRC	CRC

- **ACK** - Acknowledgement

ACK confirms a successful action. It is used as an answer to a FBE as well as for the termination of a successful data transmission.

Alert Burst	ACK

- **NAK** - Negative Acknowledgement

NAK is used as a negative answer to a FBE. A failed data transmission (CRC error) is recognized by the transmitter based on a timeout.

Alert Burst	NAK

Definitions:

DID	Destination ID
SID	Source ID
COUNT	Number of data bytes
DATA	Data (1 - 507 byte)
CRC	Cyclic Redundancy Check
ACK	Acknowledgement
NAK	Negative Acknowledgement

4.4 Network Access

A node can only actively access the physical network if it has received the token. There are several possibilities for a node accessing the network.

4.4.1 Passing on the Token

A participant receives the token but has no data packet for transmission. In this case the token will be passed on to the next NID (next ID) immediately.

If the NID does not become active within a given period of time, the owner of the token assumes that this node has left the network. Then it will start searching for a new neighbour by incrementing the Next ID register and repeating the token passing procedure. This is being continued until an active node has been found.

4.4.2 Data Transfer

A node receives the token and wants to transmit data to node ID_n. By transmitting FBE to the receiver ID_n the owner of the token requests ID_n to signal its ready-to-receive state. The ready-to-receive state is acknowledged by ACK. Now data are transmitted with checksum.

If ID_n is not prepared to receive data (for example: receive buffer full), it responds with a NAK, the token is passed on and the data transfer is retried at the next token reception.

If a data packet has been sent with a correct CRC it will be acknowledged by the receiver, which responds an ACK. A bad CRC leads to a timeout because the receiving node does not acknowledge this packet anyway. After the timeout the token will be passed on.

If the transmitter node receives the token again, it will retry to transmit the data packet. The number of retries for this procedure can be configured.

4.4.3 Broadcast Message

During a broadcast message the data is sent to every participant without acknowledgement. Broadcast messages are transmitted with a CRC without a prior FBE and are addressed to DID = 0. The token is passed on without the need for awaiting an ACK. This type of transmission is not equipped with a security mechanism.

4.5 Configuration Mechanisms

ARCNET allows to add or remove participants to or from the network during operation. The user is not involved in this action, however, he receives a status message about this reconfiguration procedure by the ARCNET controller.

4.5.1 Participant joins the Net

If a new node is added, it will destroy the token by a reconfiguration signal and enforces a complete reconfiguration of the network. After the token destruction a timeout will occur at every node. The timeout length depends on the ID of a node. Therefore the node with the highest ID times out first and tries to pass on the token to the node with the next ID.

This procedure is repeated with an incremented address according to a given timeout period until activity is detected on the net and the next ID was located.

The ID of the found participant is stored into the Next-ID register and the token is passed on. This procedure continues until every participant has investigated his NID.

4.5.2 Participant leaves the Net

If a participant leaves the net only the neighbouring participant updates his Next-ID register. It is recognized that the neighbouring node has left the net by the absence of bus activity for the token passing procedure.

The NID register of the searching node is incremented according to the reconfiguration procedure until a new a new neighbouring node has been found.

4.6 Security Mechanisms

The data transmission within ARCNET networks is secured in several ways based on low level mechanisms.

- prior to data transfer the ready-to-receive state of the target node is checked by a FBE.
- a 16 bit CRC is added to each data packet which is checked by the receiving node.
- In case of a lost token a reconfiguration is initiated and the network will be automatically reestablished.
- additionally the ARCNET controllers provide registers for diagnostic purposes.

4.7 Overhead

A fixed overhead cannot be defined for the ARCNET protocol due to the variable size of the data packets. The efficiency of the data transmission for ARCNET has a maximum of 71% of the selected baud rate (for long packets).

4.8 Timing Behaviour and Data Throughput

The timing behaviour can be exactly computed because of the token passing method. It is deterministic.

Also during high bus loads the maximum access time and the token turnaround time can be calculated for each node, according to the equation below:

$$t_{Token} = (145.4 + 4.4 \times n_{Bytes})\, n_{Nodes}\ \mu s$$

145.4 µs is the time required by the protocol for the transmission of each data packet. This value as well as the 4.4 µs per byte is not fixed but depends on the data rate which is used within the network.

For a network with 32 participants this results in a maximum access time of about 8 ms for a data packet length of 32 bytes and a data transfer rate of 2.5 Mbps.

The maximum data throughput with ARCNET is reached for the maximum

packet length of 508 bytes. The following example demonstrates this in detail.

4.8.1 Example for a Data Transmission

In this example the total time for the transmission of a short data packet of 253 bytes shall be calculated.

Node 1 has the token and transmits to node 2.

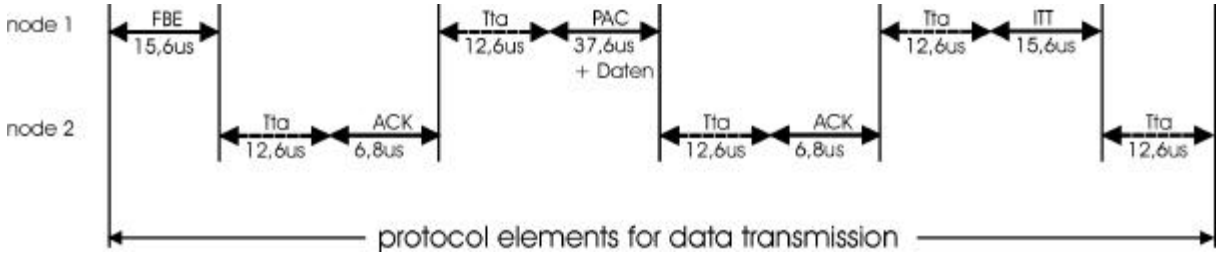

Node 1 asks with the aid of a FBE whether a data transmission to node 2 is possible. On every data transmission a turnaround time (Tta) of 12.6µs is inserted before the addressed node answers.

Node 2 waits for this period of time until it signals its ready-to-receive state with an ACK.

Node 1 waits again for the Tta before it transmits a short data packet. Node 2 acknowledges the successful transmission after Tta with an ACK.

After Tta node 1 passes the token to node 2, the transmission cycle is finished. After another Tta node 2 can start its activity.

This leads to following total time consumption for the protocol:

2 * 15.6 µs + 2 * 6.8 µs + 37.6 µs + 5 * 12.6 µs = 145.4 µs (at 2.5 Mbps)

The related data transmission requires:

4.4 µs * 253 = 1113.2 µs

This leads to a total time of 1258.6 µs and a usable data rate of 88 %.

For detailed information on times and data rates refer to [3].

4.9 Physical Properties

As transmission media coax cabling, twisted pair (shielded or unshielded) or (glas-, plastic-) optical waveguides can be choosen.

The possible cable length without the use of amplifiers depends on the media, on the selected baud rate and on the number of participants.

The ranges per segment vary from about 120 m with the ordinary twisted pair bus up to 3000 m with optical waveguide, at 2.5 Mbps.

By the use of appropriate HUB's (amplifier boards for one or more cable types) different topologies and transmission media can be combined and the transmission range increased.

4.9.1 Coax Cable and Twisted Pair with HIT - Interface

With coax and twisted pair cables a so called HIT (High Impedance Transceiver) is used as bus interface which converts the TTL signal of the ARCNET-controllers into a sinusodial signal of $15.4V_{PP}$ up to max. $25.0V_{PP}$. Furthermore it performs a potential segregation.

For coax applications a cable type with a characteristic impedance of 93 Ohms, e. g. RG 62 is used. The recommended twisted pair cables are specified inIEEE 802.3i-1990.

At 2.5 Mbps, for coax cables, eight participants and without a HUB the maximum length of a bus segment is 300 m. Under the same conditions with twisted pair cables a maximum length of 120 m can be achieved.

The maximum transmission length depends also on the number of participants. For a decreasing number of participants the usable length of a network segment is increasing due to the reduced attenuation of the signal.

The total expansion of a network can be increased by active amplifiers (HUBs). Depending on the technical implementation of these amplifiers there is a limit for the maximum number of cascaded HUBs related to the propagation delay of the HUBs.

For coax cabeling and at a transmission rate of 2.5 Mbps a maximum of 16 km network extent can be reached, for twisted pair cabeling the limit is about 6 km.

4.9.2 Twisted Pair with RS 485 Interface

RS 485 has been established as a standard for fieldbus systems. There is no fixed default data rate, the number of participants is limited to 32 units per segment using standard RS 485 transceivers. Today some types of transceivers on the market are able to overcome these traditional limitations.

For detailed information refer to the “RS-485 Cabling Guidelines” by SMC.

The network extent can also be increased by using HUBs, there are the same limitations as for coax applications.

4.9.3 Optical Waveguide

Optical waveguide connections are available for applications, which require extremely high noise immunity of the cabeling technology and huge distances for single network segments.

There is a difference between glass- and plastic optical waveguide being used, further the transmission range depends on the type of used transmitters and receivers and their optical transmit power and reception sensitivity.

At 2.5 Mbps and with glass fibre a range of 3000 m can be reached, with plastic OWG only short distances up to 100 m are possible, although plastic OWG is less expensive.

The baud rate does not play an important role with OWG transmissions.

The range can also be increased with the aid of HUBs, there are the same limitations as with coax cables.

A disadvantage of OWG is that either the star topology is used - which means that a hub is the center of the network - or that every participant contains the hub functionality. This leads to the fact that the operation of the whole system depends on the operation of every single participant.

Nevertheless there are solutions - especially for the automobile industry - with passive optical hubs which avoid these limitations.

4.10 Implementation

For own applications inexpensive ARCNET controllers are available which support datarates of up to 10 Mbps on the bus. (COM 20020 bis 5 Mbps, COM 20022 bis 10Mbps)

The lower two OSI layers are implemented on the chips.

The user communicates with the chip via a register interface. Registers for configuration and monitoring purposes are available.

The received data or data to be sent are exchanged via an integrated Dual Port Ram.

A 8051 compatible microprocessor with built in ARCNET controller is also available. (COM 20051)

For the coax interface connection a HIT is available. (HYC 9088A)

The connection to RS 485 and optical waveguide networks is possible with inexpensive standard components,

There are driver libraries for the INTEL 8051 and 80x86 processors for software development. (ControLink 51 and 86)

The standardization of the transmission protocols, of layer 7 and of an OPC interface is promoted by the newly founded ARCNET USER GROUP (AUG).

5 Summary

ARCNET, due to its fast and computable realtime behavior and its flexible data packet size, can be used in the sensor / actor field as well as on process- and cellbus level.

Inexpensive node implementations and the possibility to setup networks of large dimensions for multiple nodes are further ARCNET advantages

Field devices can be connected to and disconnected from the bus without interferences.

A classification and a comparison with other bus systems follows below.

Due to the complete implementation of the network protocol on chip level the use of ARCNET as systembus solution within stand-alone units is also very interesting.

6 Classification of the different Bus Systems

The presently available fieldbusses can be classified into the following groups:

- event controlled systems, like CAN and LON
- systems which can be used for explosion protected applications , like FIP, PROFIBUS-PA and P-NET
- fast, deterministic systems, like ASI, INTERBUS-S/DP, SERCOS, ARCNET and IEEE-Bus
- deterministic systems, like BITBUS, PROFIBUS-FMS

ARCNET is to be placed into the group of the fast, deterministic systems. However, also for other applications the use of ARCNET would make sense due to its specific benefits.

7 ARCNET as a Systembus

Due to the high integration of the ARCNET controllers and a special transmission mode, ARCNET is also used as a networking bus for single components within stand-alone units.

Multimaster capabilities and the simple processor interface support architectures with distributed intelligence. This results in advantages concerning device maintenance and diagnostics.

8 ARCNET in Comparison

Bus type	ASI	INTERBUS-S	SERCOS	PROFIBUS-DP	ARCNET
Comment	only binary I/O		optical waveguide		
No. of Mastersl	1	1	1	1 to 32	1 to 255
Topology	line	ring	Ring	Line	line, star, tree
Cable Length	100m	-12,8km(1) -10m(2)	-60m(3) -250m(4)	200m bei 1,5Mbit	Refer to table 2
No. of Participants	31	256(1) 7(2)	245	124/32	256
Max. Datarate	167 kbit/s	500 kbit/s	4 Mbit/s	1,5 Mbit/s	10 Mbit/s
No. of Wires	2(6)	2(6) 8(2)	1 LWL	2	1 – 2 (7)
Coding	ALP Manchester (RZ)	RS-485 (NRZ)	NRZI according HDLC	RS-485 (NRZ)	RS-485 (NRZ)
Error Recognition	Parity (1 dim.)	16 Bit CRC	16 Bit CRC	Parity (2 dim.)	16 Bit CRC
No. of data bytes	5 Bit	4 to 64	1 bis 16	1 to 246	1 to 508
Communication Structure	Connection oriented	Connection oriented	Connection oriented	Connection oriented	Connection oriented and Global
Access Method	Master/ Slave Polling	Master/Slave sum frame	Master/ Slave Time slots	Master/Master TokenRing Master/Slave Polling	Master/ Master Token Ring
User Access	Service controlled	Service controlled	ID-numbers	User Interface DDLM	Data blocks and Commands
Layer 2	Chip	Chip	Chip	Chip	Chip
Standardization	no	DIN E 19258	IEC DIS 44	DIN E 19245	ATA/ANSI 878.1, 2 and 3

(1) far distance bus (2) peripheral bus (3) plastic OWG

(6) incl. auxiliary power supply (7) 1 with coax, 2 with twisted pair and OWG

Bus type	CAN	LON
Comment		Comprises layer 1 to 7
No. of Mastersl	multimaster	Multimaster
Topology	line	line / tree
Cable Length	40m at 1 Mbit/s	500m at 1.25Mbit/s
No. of Participants	256	64
Max. Datarate	1 Mbit/s	1.25 Mbit/s
No. of Wires	2	2
Coding	RS-485 / ISO11898 (NRZ)	RS-485 / Manchester (RZ)
Error Recognition	15 Bit CRC	16 Bit CRC
No. of data bytes	1 to 8	Max. 228 (1)
Communication Structure	Object oriented	Object oriented
Access Method	CSMA/CA	CSMA/CA
User Access	CAN Application Layer	Netzwork Variables, Explicit Messaging
Layer 2	Chip	Chip (2)
Standardization	ISO11898 ISO11519-1	No

(1) LON is optimized for small packet sizes

(2) Protocol has not been publicated

Source: Robert Busse, Feldbussysteme im Vergleich, Pflaum Verlag, München

Transmission Media	Segment length with 2 Participants	Network Dimension
Coax	300 m	16 km
TWP	about 120 m	8 km
LWL	3000 m	20 km
RS 485	200 m	16 km

Table 2: Cable length for ARCNET at 2.5 Mbps

9 Circuit and Layout Proposals

This part of the ARCNET description contains circuit proposals for the physical ARCNET bus interface. Beside circuit schematics also design proposals and further hints are included to simplify the implementation of user specific interfaces.

9.1 Coax Interface

9.1.1 Physical Transmission Layer

The physical transmission layer consists of transceivers (HIT), the transmission media coax cable with an impedance of 93 Ohms (RG62) and the corresponding bus termination networks (resistors).

9.1.1.1 Data Rate

The coax interface supports a fixed datarate of 2.5 Mbps.

9.1.1.2 Connectors

Allowed are BNC female connectors for the nodes with a characteristic impedance of 50 or 75 Ohm and the corresponding male connector for the cables.

9.1.1.3 Transmission Media and Termination

Coax cable with an impedance of 93 Ohm e.g. type RG 62 U

The cable has to be terminated on both sides with a resistor of 93 Ohm. The termination can either be integrated in the device or supplied by an external resistors (integrated in a BNC male connector). It has to be possible to activate / deactivate internal termination by switches or jumpers.

9.1.1.4 Signal Shape and Level

For the transmission of the information a dipulse signal is used as shown in the figure below. The signal level has to be between 15.4V and 25.0V peak-peak.

A "1“ bit is transmitted as a 200 ns dipulse followed by 200 ns without a signal, a "0" as 400 ns without a signal. For further information refer to [5].

Signal shape for dipulse transmission

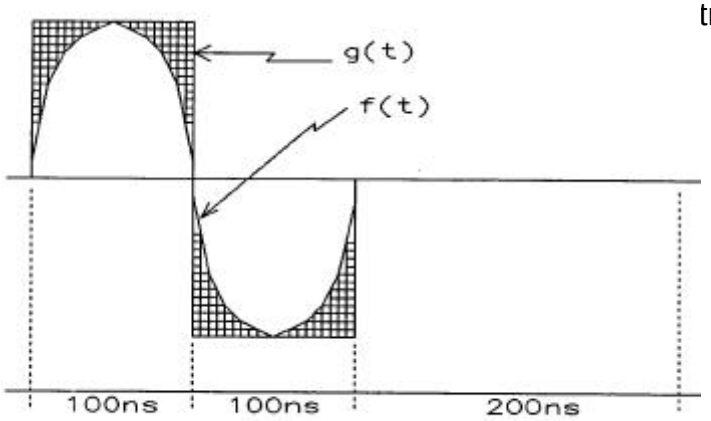

9.1.1 Important Wiring Hints

The table below shows the most important wiring parameters.

	Bus	**Star**
Minimum distance between two nodes	1m	1m
Node impedance	> 1,2 kOhm	> 1,2 kOhm
Termiantion resistance	93 Ohm	93 Ohm
Maximum no. of nodes per segment	8	2
Maximum segment length	300 m	610 m

The maximum segment length depends on the number of connected participants. It can be calculated based on the following equation:

Segment length $l_k = (P_o – d_t\, n_t) / d_k$

P_o = transmit power above receiver threshhold [dB] (typical value 11dB)

d_t = attenuation per participant [dB] (typical value 0,45dB)

n_t = no. of participants

d_k = cable attenuation per m [dB/m]

9.1.2 Circuit

The following design proposal describes an ARCNET node for coax cabling.

Hereby electromagnetic compatibility aspects are especially emphasized.

9.1.2.1 Circuit Schematic

The following circuit diagram shows a typical coax interface containing a hybride module (type HYC9088(SMC), a BNC connector and the protection circuit.

The termination is not included here because it is usually implemented as external termination resistor at both ends of the coax cable.

The approved design consequently separates electronic ground (GND_E) and chassis ground (GND_A).

The protection circuit consists of R1, R2, V1 and C1. By this configuration any noise power, which is coupled into the coax cable in a noisy environment, is carried down to the reference potential and therefore kept away from the network interface hybrid module. As reference potential a metal cover (housing) for the unit offers high noise immunity especially for industrial applications. The metal cover needs to be designed for high impedance segregation related to the remaining electronic circuit within the housing.

R1 and R2 serve as leakage resistors to avoid high static potential differences at the network interface. C1 is a high frequency short circuit. The varistor limits voltage peaks to protect C1 against overload. L1 and L2 are ferrite beads which can be optionally used to increase the immunity against high frequency noise. As an alternative to the varistor a supressor diode can also be used. A coax connector with integrated bleed off capacitors should be used.

9.1.2.2 Components

Components for the protection circuit:

Number	Reference	Designator	Type	Value
1	U1	HIT	HCY9088 AS	
1	C1	Metallized Film Capacitor 400V	FKC3	10nF
1	V1	Varistor	V275LA20	
2	R1, 2	Metalfilm resistor 1/2W	PR01	5k6

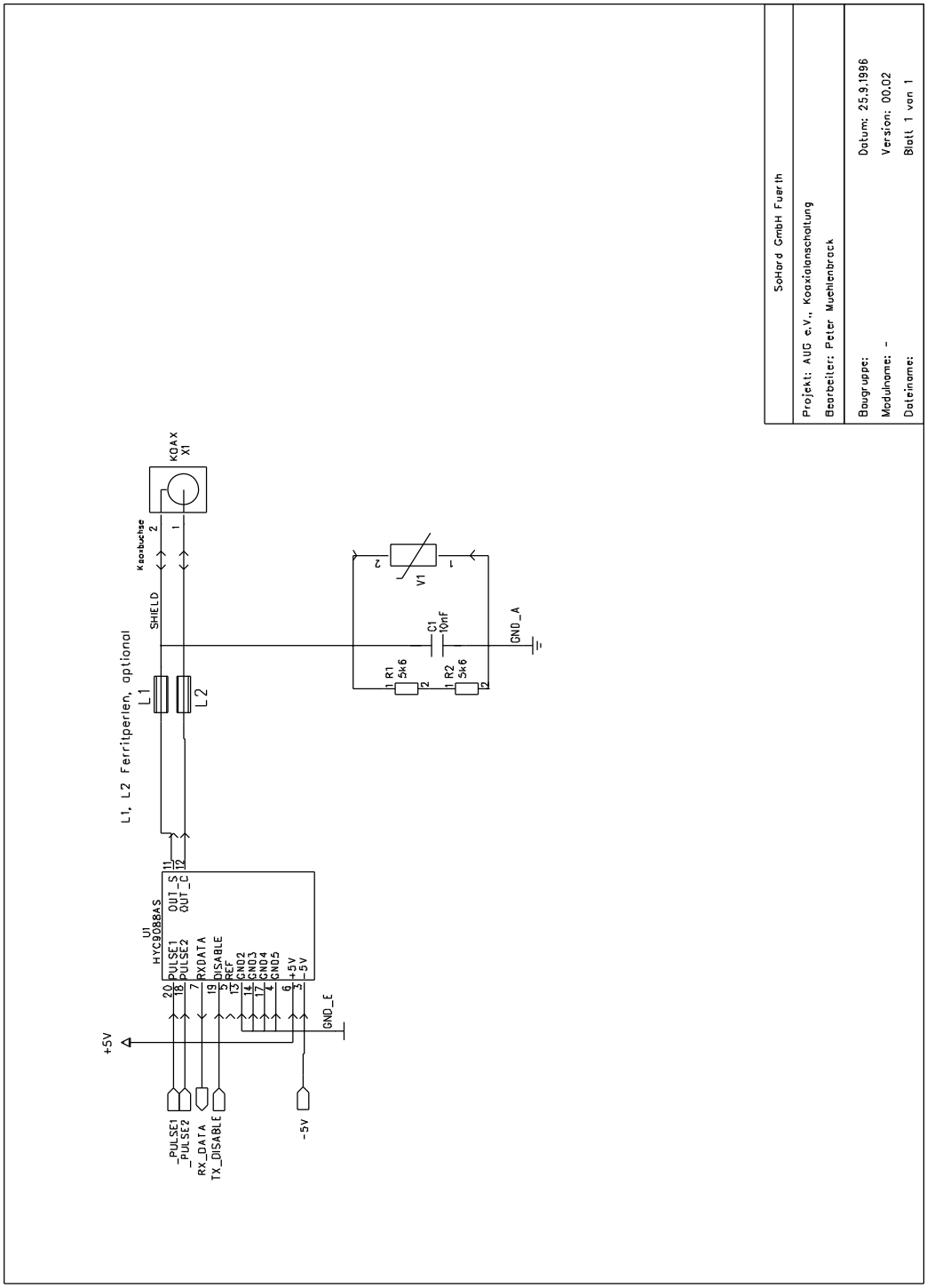

Figure: Circuit schematic of a coax interface

9.1.3 Layout

For the described circuit a layout has been developed which emphasizes electromagnetic compatibility aspects.

9.1.3.1 Ground Layout

The layout of the ground signal is the most important factor for the noise immunity. The connection between protection circuit and chassis should be as short as possible and/or connected by a wide track.

The following example layout for a PC card clarifies this. The slot panel with two lugs is the low impedance connection between protection circuit and chassis.

9.1.3.2 Component Placement and Pads

The placement of the components refers to the track layout which is shown below.

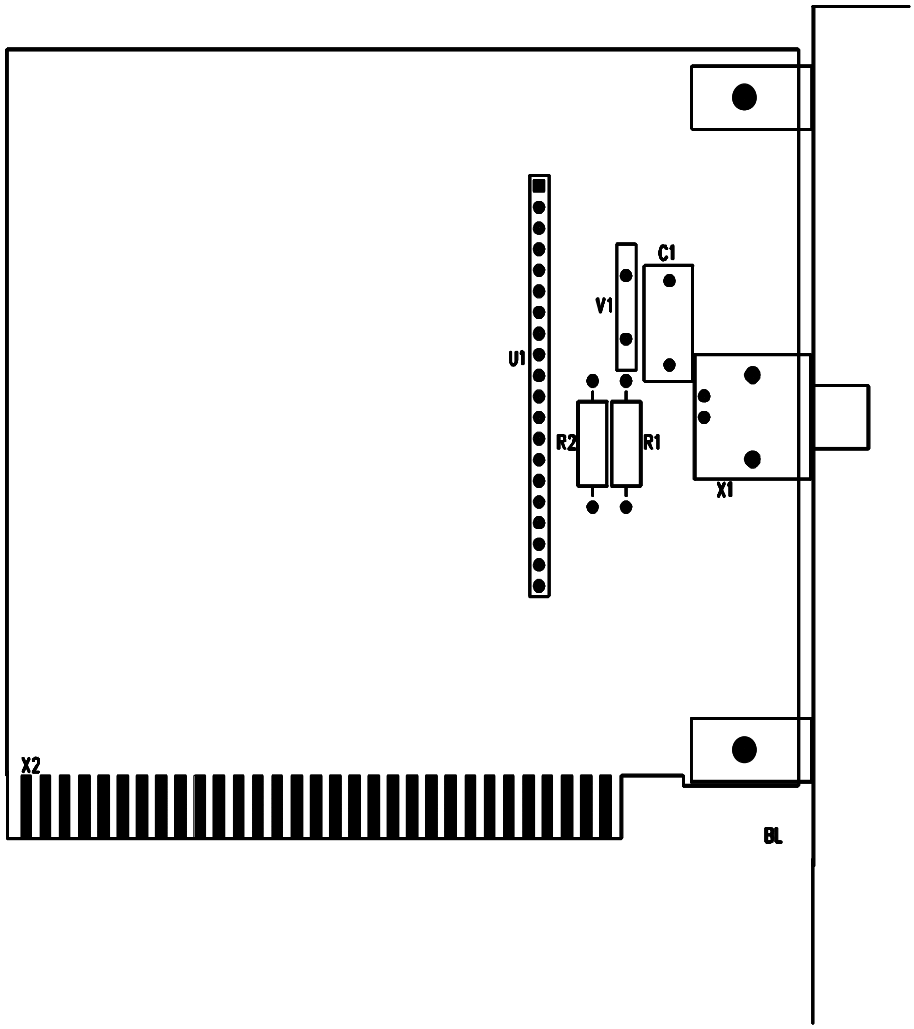

9.1.3.3 Layout

Important is the wide grounded area which ensures the connection between protection circuit and front panel. The grounded area is segregated from the PC ground on the ARCNET card.

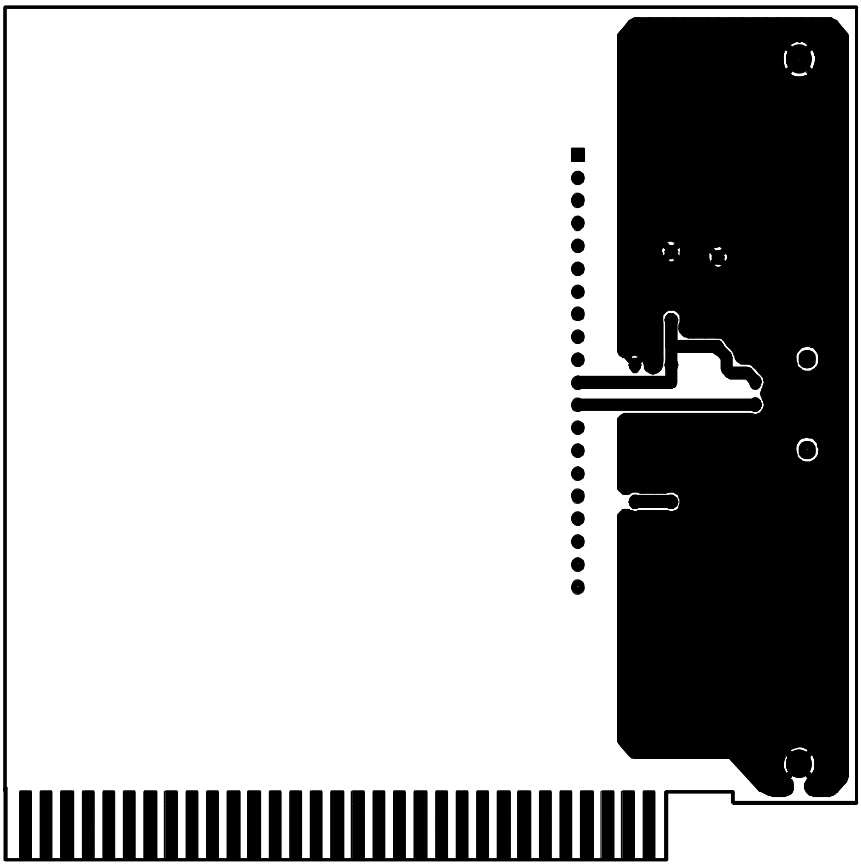

9.1.4 Transceiver

The following table lists different transceiver modules currently available on the market.

Type	Vendor	Supply Voltages	Impedance	Isolation Voltage	Datarate
HYC9088A	SMC	+5V, -5V	high impedance	n.A.	2.5 MBit/s
JTL7958R	JASMINE	+5V	high impedance	n.A	2.5 MBit/s
MIT P/N A60152-10	MIT	+5V -5V or -12 V	high impedance	n.A	2.5 MBit/s
MIT P/N A60151-10	MIT	+5V -5V or -12 V	93 Ohm	n.A.	2.5 MBit/s

This table does not intend to be complete.

9.2 TWP

9.2.1 Physical Transmission Layer

This physical transmission layer consists of the transceivers, the transmission media twisted pair cable and the corresponding bus terminators.

The signal lines are twisted to achieve a defined impedance and a high noise immunity.

9.2.1.1 Bit Rate

The coax interface supports a fixed datarate of 2.5 Mbps.

9.2.1.2 Connectors

For the nodes a 9-pin SUB-D male connector is used. The cables are equipped with 9-pin SUB-D female connectors. The housing of the connectors at the cable should consist of a conducting material (metal or conducting plastic cover) and has to be connected to the twisted pair cable shield over a wide area for low inductance. We additionally recommend to connect the shield to pin 1 of the connector.

9.2.1.3 Connector Pin Assignment

Pin No.	Signal Name	Comment
1 and chassis	Shield	Chassis and front panel potential
3	TWP-	"shield" I/O of the HIT
8	TWP+	"center" I/O of the HIT
2,4-7, 9	not used	

9.2.1.4 Transmission Media and Termination

TWP uses shielded twisted pair cables. The two wires of the pair are twisted to achieve a defined impedance and a high noise immunity. Attenuation and recommended cable types meet the specifications described in chapter "RS485".

The cable has to be terminated at both ends with a resistor of 120 Ohm/0.5W. The termination can either be integrated in the device or supplied by an external plugable resistor. It has to be possible to activate / deactivate internal termination by switches or jumpers.

9.2.1.5 Signal Shape and Level

For the transmission of the information a dipulse signal is used as shown in the figure. The signal level has to be between 15.4V and 25.0V peak-peak.

A "1“ bit is transmitted as a 200 ns dipulse followed by 200 ns without a signal, a "0" as 400 ns without a signal. For further information refer to [5].

The interface has to be designed in such a way that the ARCNET controller interprets the transition from logical 0 to logical 1.

9.2.1.6 Important Wiring Hints

The table below defines the most important wiring parameters.

	Bus	**Star**
Minimum distance between two nodes	2m	2m
Node impedance	> 1.2 kOhm	> 1.2 kOhm
Termination resistor	120 Ohm	120 Ohm
Maximum no. of nodes per segment	8	2
Maximum segment length	about 120 m	about 280 m

9.2.2 Circuit

In the following a design proposal for an ARCNET node for twisted pair cabling is presented.

Hereby electromagnetic compatibility aspects are especially emphasized.

TWP is based on a HIT device driving the twisted pair cable.

In contrast to RS485 systems the electrical segregation is done by the transformer within the HIT device. The setting of a defined inactive level by pullup and pulldown resistors as it is used for RS485 is not necessary.

9.2.1.7 Circuit Diagram

The following circuit diagram describes a typical twisted pair interface based on a hybride of the type HYC9088, a 9-pin SUB-D male connector and the corresponding protection circuit.

The approved design consequently segregates electronic ground (GND_E) and chassis ground (GND_A).

The protection circuit consists of R1, R2, V1 and C1. By this configuration any noise power, which is coupled into the coax cable in a noisy environment, is carried down to the reference potential and therefore kept away from the network interface hybrid module. As reference potential a metal cover (housing) for the unit offers high noise immunity especially for industrial applications. The metal cover needs to be designed for high impedance segregation related to the remaining electronic circuit within the housing.

R1 and R2 serve as leakage resistors to avoid high static potential differences at the network interface. C1 is a high frequency short circuit. The varistor limits voltage peaks to protect C1 against overload. L1 and L2 are ferrite beads which can be optionally used to increase the immunity against high frequency noise. As an alternative to the varistor a supressor diode can also be used. A coax connector with integrated bleed off capacitors should be used.

We recommend the use of a shielded twisted pair cable which meets the specifications described in the chapter "Design Proposal for a RS485 Interface". The housing of the connectors at the cable should consist of a conducting material (metal or conducting plastic cover) and has to be connected to the twisted pair cable shield over a wide area for low inductance. We additionally recommend to connect the shield to pin 1 of the connector.

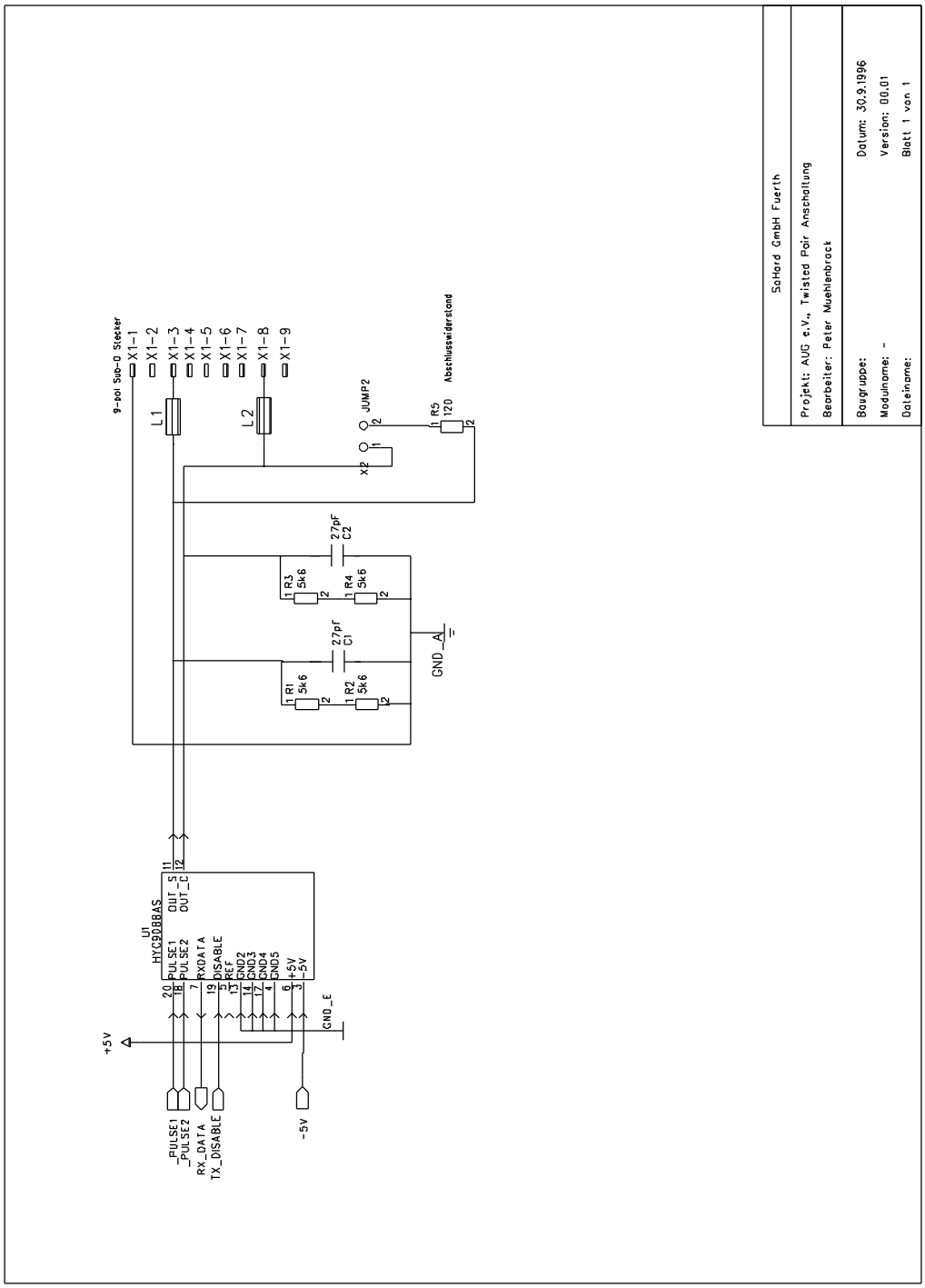
9-pol Sub-D Stecker
X1-1
X1-2
X1-3
X1-4
X1-5
X1-6
X1-7
X1-8
X1-9
L1
L2
JUMP2
X2
R5
120
Abschlusswiderstand
27pF
C2
R3
5k6
R4
5k6
27pF
C1
R1
5k6
R2
5k6
GND_A
U1
HYC90BBAS
PULSE1
PULSE2
RXDATA
DISABLE
REF
GND2
GND3
GND4
GND5
+5V
-5V
OUT_S
OUT_C
GND_E
+5V
_PULSE1
_PULSE2
RX_DATA
TX_DISABLE
-5V
Sahard GmbH Fuerth
Projekt: AUG e.V., Twisted Pair Anschaltung
Bearbeiter: Peter Muehlenbrock
Baugruppe:
Modulname: -
Dateiname:
Datum: 30.9.1996
Version: 00.01
Blatt 1 von 1

9.2.1.8 Termination

The cable has to be terminated with the characteristic impedance of the cable on both ends of the bus. This is performed by jumper X2 and resistor R5.

9.2.1.9 Components

Number	Reference	Designation	Type	Value
1	U1	HIT	HCY9088AS	
2	C1, C2	ceramic capacitor, > 1000V	DE0910SL220J6K	22pF
4	R1-R4	resistor, 0.5 W coal or metal film		5k6
1	R5	resistor, 0.5 W coal or metal film		120

9.2.3 Layout

The recommendations describes for the coax design proposal are also valid for twisted pair applications.

9.3 OWG

9.3.1 Physical Transmission Layer

9.3.1.1 Overview

The transmission via optical waveguide is recommended especially for long distances and/or high requirements concerning noise immunity.

9.3.1.2 Datarate

All datarates supplied by ARCNET are supported.

9.3.1.3 Connectors

Due to the numerous available OWG systems and fields of application no standardization will be offered.

9.3.1.4 Signal Shape and Level

A logical 0 corresponds to no light.

A logical 1 corresponds to a pulse (=light) of the length T_On = 0.25 to 0.5 bit.

The interface has to be designed in such a way that the ARCNET controller interprets the transition from "no light" = logical 0 to "light" = logical 1.

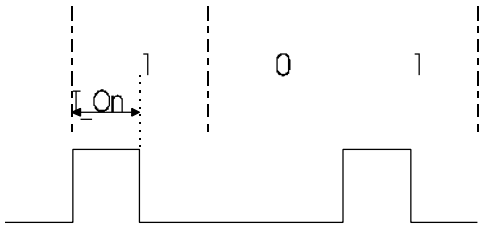

Figure 1: OWG signal shape

A careful design of the OWG circuit is recommended. It has to be considered that the bit jitter should be kept as small as possible. Bit jitter occurs if the optical transmission power is too high (photo diode overdrive) as well as if it is too low (noise).

9.3.1.5 Transmission Media

Due to the numerous available OWG systems and fields of application no standardization will be offered.

9.3.2 Circuit

In the following a design proposal for an ARCNET node with an optical waveguide interface is presented.

9.3.1.6 Circuit Diagram

The following circuit diagram shows a typical interface between an ARCNET controller and an optical waveguide (SMA connectors).

RX_DATA is the received signal which has been converted into a TTL signal which is connected to the data input of a COM20020 device. _TX_DATA is the transmitted TTL signal. A TTL high level corresponds to a logical 0 (no light) and is defined as the idle state. The _PULSE1 output of the COM 20020 device supports this type of signal. It has to be considered that the transmitted data are also returned to the input via the gates U3B and U3C. This is necessary because the ARCNET controller continuously monitors the bus for timeouts and initiates a reconfiguration cycle if a timeout occurs.

9.3.1.7 Power Setting

We strongly recommend to design the OWG interface for an adjustable transmission power. In the circuit diagram the resistors R6, 8, 9 and jumper X3 are used for that adjustment of the required transmission power.

Most of the OWG receivers at the market are sensitive against overdrive, which is caused by receiving a high amount of light power at the input. This results in an increased bit jitter for misaligned input power which also causes a considerable increase of the bit error rate.

For a calculation example on the correct OWG interface design refer to [4].

9.3.3 Layout

OWG receivers are usually very sensitive against noisy supply voltages. Therefore a proper decoupling of the power supply has to be performed by the use of bypass capacitors.

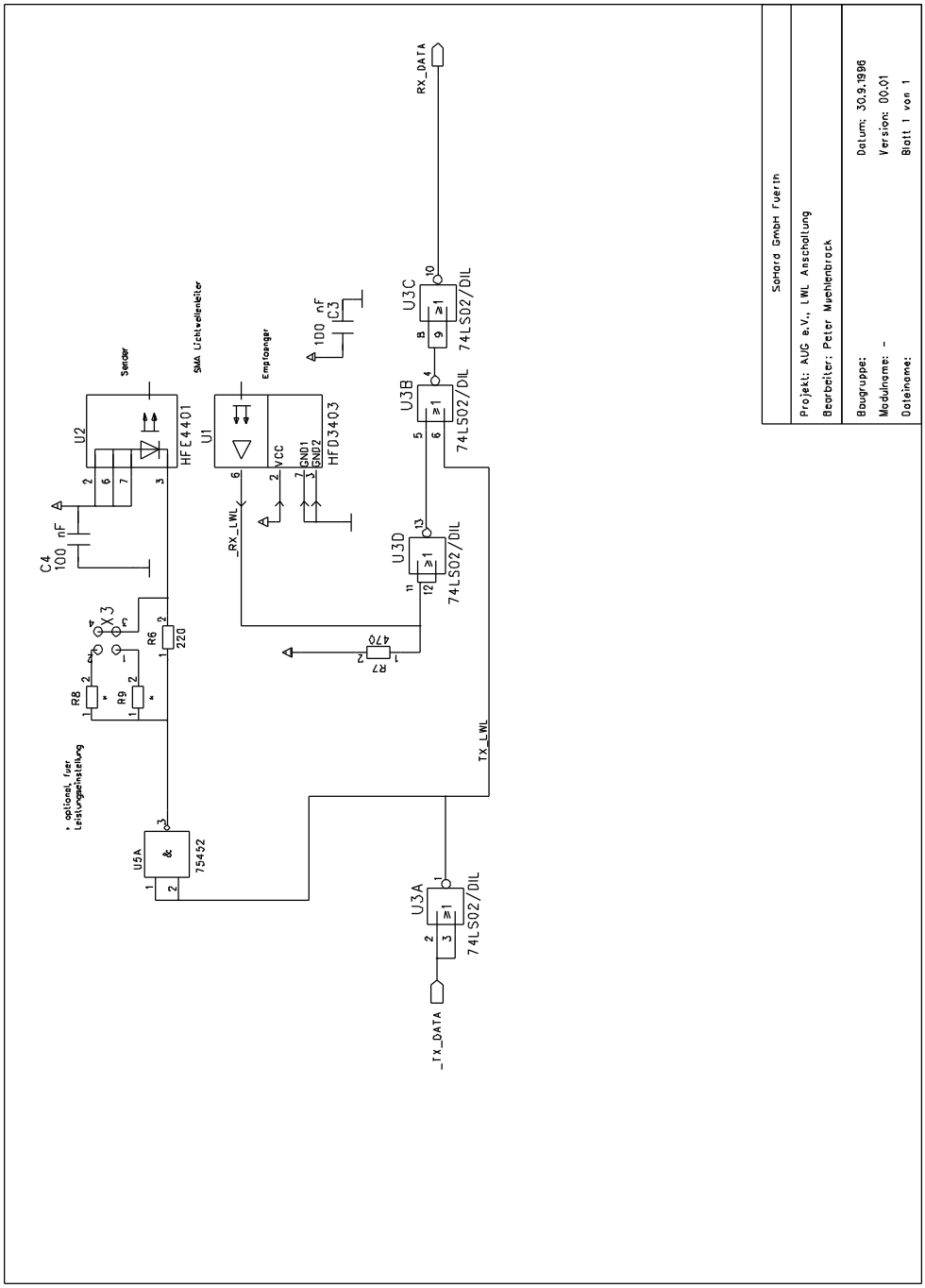

Figure: circuit diagram of an OWG interface

9.3.4 Network Extension for OWG Interfaces

The extension of an ARCNET network mainly depends on optical transmission power, receiver sensivity, fiber attenuation and transition losses at connectors etc.

An additional amount of reserved power has always to be included.

The range (in m) is calculated according to the equation below:

r = (Po - Pi - m - Ls + Gdia)/ L *1000

Po = optical transmission power of the transmission diode [dBmW]

Pi = minimum receive power required for the receiver module [dBmW]

m = margin = reserve [dB]

L = attenuation of the OWG [dB/km] per km

Ls = all connector attenuation and splice losses

Gdia = adaption factor [db] which depends on the cable type

r = range [m]

9.3.1.8 Example 1

Example for an OWG interface based on a TOSLINK module TODX296 and a plastic fibre of the type TOCP200. Bit rate = 2.5 Mbit/s. All values are worst case.

Po = -20 dBm, Pi = -31 dBm, m = 3 dB, L = 240dB/km

Ls = 0, because the cable calculation already includes the connector losses

--> r = 33 m

9.3.1.9 Example 2

Example for an OWG interface based on a Honeywell transmission diode HFE 4401-014, receiver HFD 3403-002 and a glas fibre of the type HOCZ 0052.

Bit rate = 2.5 Mbit/s. All values are worst case.

Po = -17 dBm, Pi = -25.5 dBm, m = 3 dB, L = 3.5 dB/km

Ls = 0, because the cable calculation already includes the connector losses

--> r = 1570 m

Note: Gdia is set to 0 dB in the examples.

9.4 Low Cost OWG

9.4.1 Overview

For short distances (up to about 50 m) at high noise immunity requirements, plastic optical waveguides are especially suitable as transmission media. However, the wavelength of the transmission diode has to fit to the spectral attenuation of the plastic OWG. At a wavelength of 660 nm transmission distances of up to 30 m can be achieved without a special treatment of the plastic OWG ends.

9.4.2 Functional Specifications

9.4.1.1 Datarate

All datarates supplied by ARCNET are supported.

9.4.1.2 Signal Shape and Level

Signal shape and level meet the specifications above for standard OWG interfaces.

9.4.1.3 Mechanichal Specifications

The connection of the optical waveguide to the transmitter and receiver devices is performed either directly (Siemens) or by using a SMA-connector (Honeywell). The devices of Siemens and Honeywell can be combined within a network. For shorter distances (about 20 m) also standard OWG components can be mixed up with low cost OWG devices.

Siemens:

Transmitter unit SFH 752V, receiver unit SFH 551 V

The OWG is cut to length, inserted into the OWG module without further treatment and mechanically fixed with a nut. For long transmission distances the end of the OWG fibre can be treated with grinding paper.

Honeywell:

Transmitter unit HFX6015 xxx, receiver unit HFD3403-2xx

Connection by SMA-connectors.

9.4.1.4 Transmission Media

Plastic fibre OWG with a core of 1 mm diameter and a black cover, total diameter of 2.2 mm. Installation as single and duplex cable.

Duplex OWG Honeywell HOCD0202 or Hirschman OKD 1000-B

Typical technical data:

- attenuation at 660 nm about 200 dB/km
- evironmental temperature -20 to +80 C
- Isolation voltage 110 kV/m
- longitudinal strength 100 N

9.4.3 Circuit

For the electrical circuit, layout and power settings, the same specifications as for OWG are valid.

9.5 RS485

9.5.1 Pysical Transmission Layer

The transmission technology is based on the EIA RS-485 stansard.

9.5.1.1 Datarate

All datarates supplied by ARCNET are supported.

9.5.1.2 Signal Shape and Level

A logical 0 corresponds to a *positive* voltage difference between the signals DATA+ und DATA- of at least 0.2 V.

A logical 1 corresponds to a *negative* voltage difference between the signals DATA+ und DATA- of at least 0.2 V.

T_On equals 0.5 * bit length +- 10%. The following figure shows the *logical* shape during the transmission.

The interface has to be designed in such a way that the ARCNET controller interprets the transition from logical 0 to logical 1.

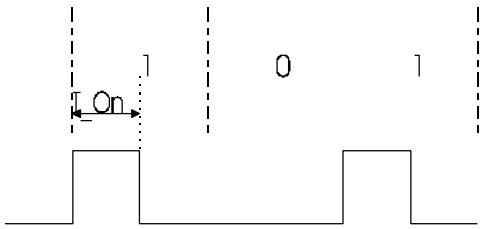

Figure 2: logical RS485 signal shape

9.5.1.1 Mechanical Specifications

For the connection of the bus cable to the bus participant a 9-pin SUB-D connector is used. The female connector is used at the bus cable, the male connector is used at the bus interface of the participant.

The connectors should always be equipped with metal housings. The mechanical fixture between connectors should be based on conducting screws.

For the connection of bus participants to the bus cable a so called T-connector part should be used which supports an easy removal or exchange of the bus participant without the need of breaking up the cable segment.

9.5.1.2 Connector Pin Assignment

Pin No.	Designator	Description
	Connector housing	Wide area connection to shield
1	Shield	Shield and protective ground Optional
2	RP-P	Reserved for auxiliary voltage supply + , for the supply of bus interface units and repeaters without private power supply Optional
3	DATA-B	Data line B (=RS485-B), in idle state more negative than DATA-A
4	CNTR-A	Reserved for signals for direction control of repeaters with RS485 technology (=RS485-A), in idle state more positive than CNTR-B Optional
5	DGND	Data reference potential, supply of the termination networks
6	VP	Supply voltage +, supply of the termination networks, only necessary for participants at end of the cable
7	RP-N	Reserved for auxiliary voltage supply-GND, for the supply of bus interface units and repeaters without private power supply Optional
8	DATA-A	Data line A (=RS485-A), in idle state more positive than DATA-B
9	CNTR-B	Reserved for signals for direction control of repeaters with RS485 technology (=RS485-B), in idle state more positive than CNTR-A Optional

9.5.1.3 Transmission Media

As bus cable a shielded twisted pair cable is used. The shield is necessary for the improvement of the electromagnetic compatibility.

The cable used should meet following specifications:

9.5.1.5.1 Attenuation

- at 16MHz <45dB/km
- at 4MHz <22dB/km
- at 38.4kHz <5dB/km
- at 9.6 KHz <3dB/km

9.5.1.5.2 Characteristic Impedance

- at 3MHz bis 20MHz 150±15Ω
- at 38.4kHz 185±18,5Ω
- at 9.5kHz 270±27Ω
- rated value: 150Ω

9.5.1.5.3 Operation Voltage

- ≤100V

9.5.1.5.4 Capacity

≤ 30pF/m (for transmission rates from 3 to 20MHz)

≤ 60pF/m (for transmission rates below 3MHz)

9.5.1.5.5 Wire Diameter

- 0,34mm^2 (for transmission rates from 3 to 20MHz)
- 0,22mm^2 (for transmission rates below 3MHz)

Tee lines to participants should be kept shorter than 0.3 m.

9.5.1.6 Circuit Diagram for Cable bewteen two Nodes

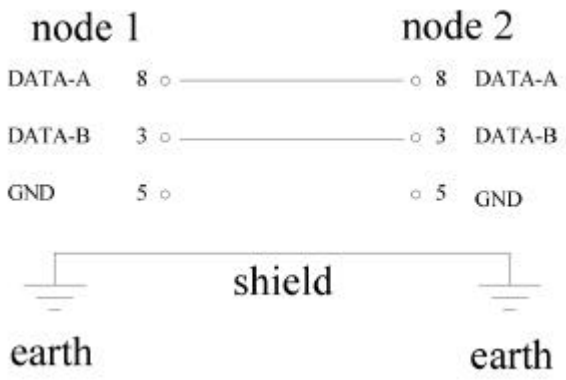

For the circuit shown above, the potential difference between all the data reference potentials (DGND) of all interfaces must not exceed ±7V. If this cannot be ensured a separate potential compensation has to be used.

At both connectors the shield should be wired to the protective ground with a connection of low inductance in order to achieve optimum electromagnetic compatibility. This connection is preferably established by the metal chassis and the screws of the SUB-D plug. If this is not possible the connection should be established by pin 1 of the connector.

9.5.1.4 Termination

Both ends of the bus cable have to be equipped with a termination resistor R_t = 220Ω. To ensure a defined signal level at the line for inactive states an additional resistor Rd = 390Ω has to be connected against GND and another resistor Ru = 390Ω against the supply voltage +. The participants which act as line termination have to provide VP and DGND (recommendations are valid for a supply voltage of +5V ± 5%). The line termination can be performed within the nodes or within the housing of the external connectors.

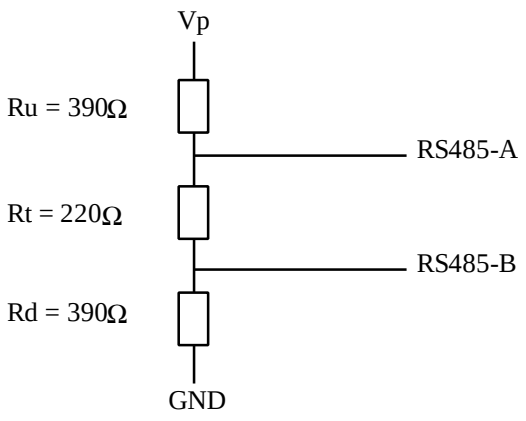

R_t = 220Ω ± 2%, min ¼ W

Rd = 390Ω ± 2%, min ¼ W

Ru = 390Ω ± 2%, min ¼ W

The total high frequency impedance R_T calculates as follows:

with Rd = Ru

$1/R_T = 1/R_t + 2/R_d = 1/Z_{cable}$

9.5.1.5 Wiring Example for the minimum Configuration

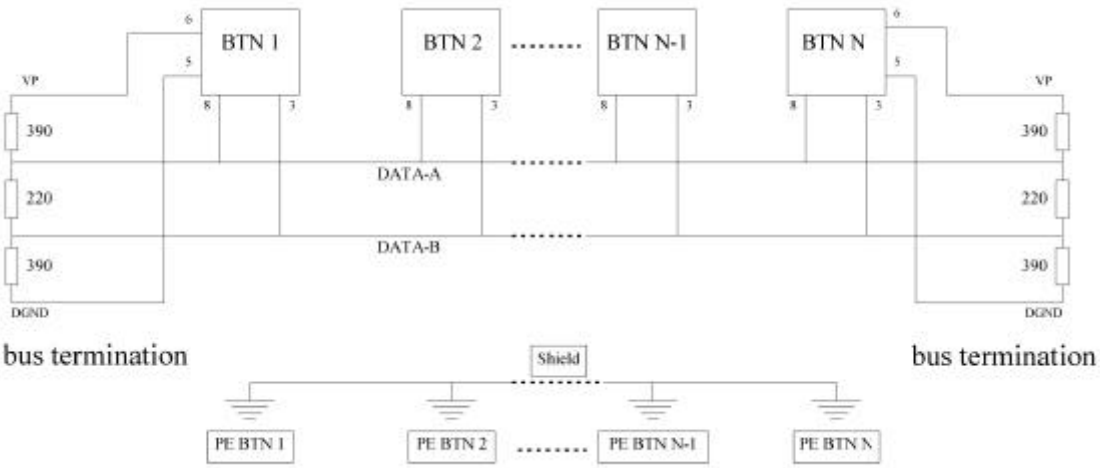

9.5.1.6 Wiring and Network Extension

Different factors determine the maximum extension of a network segment:

- data rate
- technical specifications of the cable (e.g. attenuation)
- attenuation by the participants
- attenuation by protection circuits
- power of the transceiver units

Therefore the extension of an RS485 network has to be evaluated in details for each application and is not outlined here.

9.5.2 Circuits

9.5.2.1 Protection Circuit

To protect the RS485 driver against fast transients the data lines A and B are connected to suppressor diodes. In order to minimize the load on the bus lines low capacity suppressor diodes are used (suppressor diodes with a standard diode in series). The load by the transient protection is hereby limited to a value of 10 pF per wire.

As a protection againt lightning discharges gas discharge elements should be used against the ground wire.

9.5.2.2 Factors for the Improvement of the Electromagnetic Compatibility

- Tee lines between transceiver and SUB-D connector as short as possible
- Placement of bus termination and transient protection as close to the SUB-D connector as possible
- Shield connected to protective earth (at both sides, connection with low inductance over a large area)
- Shield soldered to the metal cover of the connector (better results than for connection at strain relief)
- Ground areas
- Separation of electrically segregated parts
- Ferrite tube or 6-hole cores over bus cable (subsequent installation possible)
- protective ground area at the front panel is recommended

Y-capacitors (4.7nF, 100V) for voltage supply and auxiliary energy

9.5.2.3 Circuit Layout without electrical Segregation

Due to a limited noise immunity the use of this circuit is only recommended small systems (e.g. within a wiring cabinet)

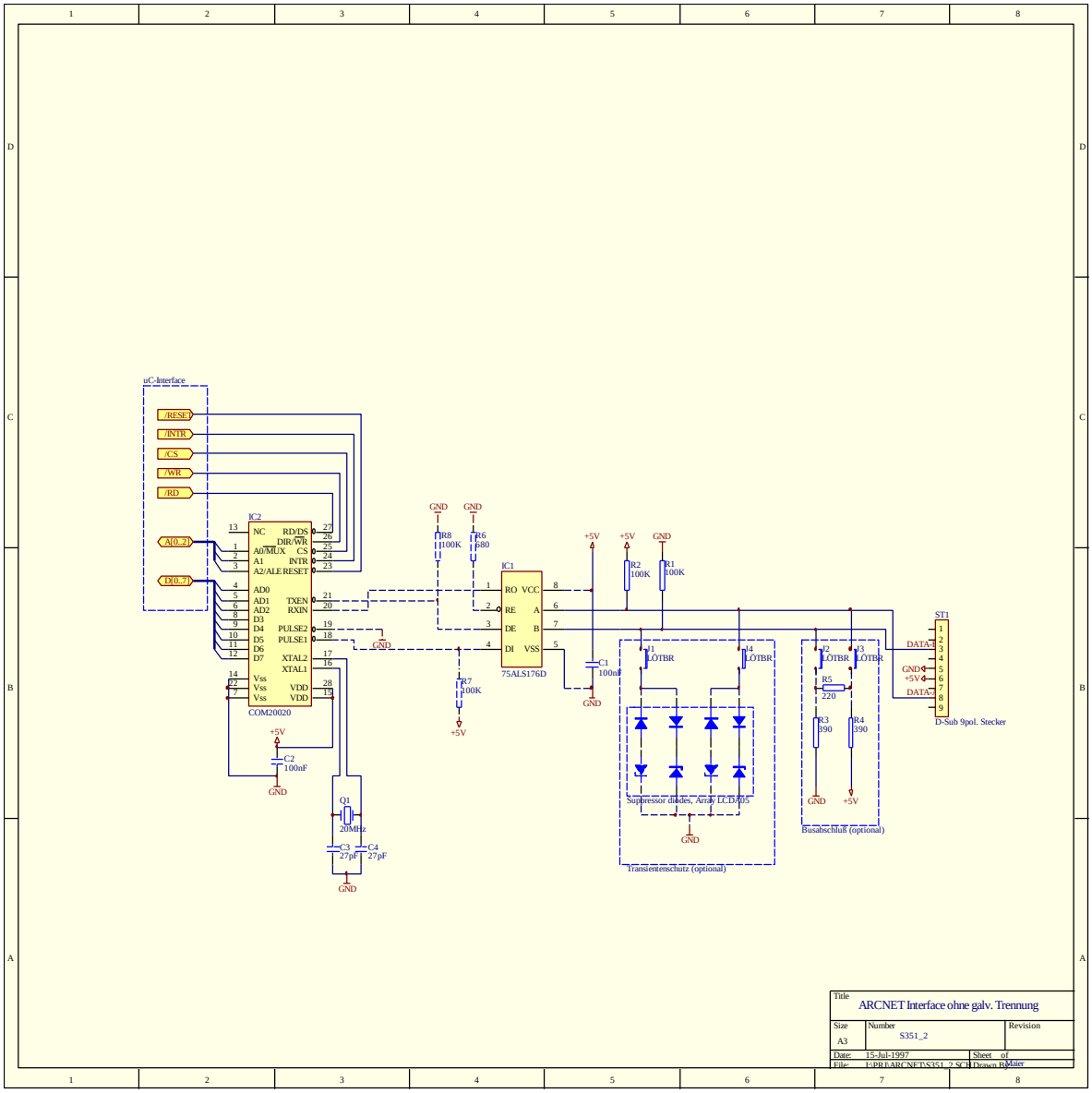

9.5.2.3.1 Components

Number	Reference	Designation	Type	Value
1	IC1	RS485 transceiver	SN75ALS176D	
1	IC2	ARCNET controller	COM20020	
1	Q1	Crystal oscillator		20MHz
1	ST1	Connector	SUB-D 9-pin connector	
1		Suppressor diodes	Array LCDA05	

9.5.2.3.2 Wiring

1 x 2: twisted pair cable with two unshielded wires for data signals A and B

9.5.2.4 Optically decoupled Circuit Layout

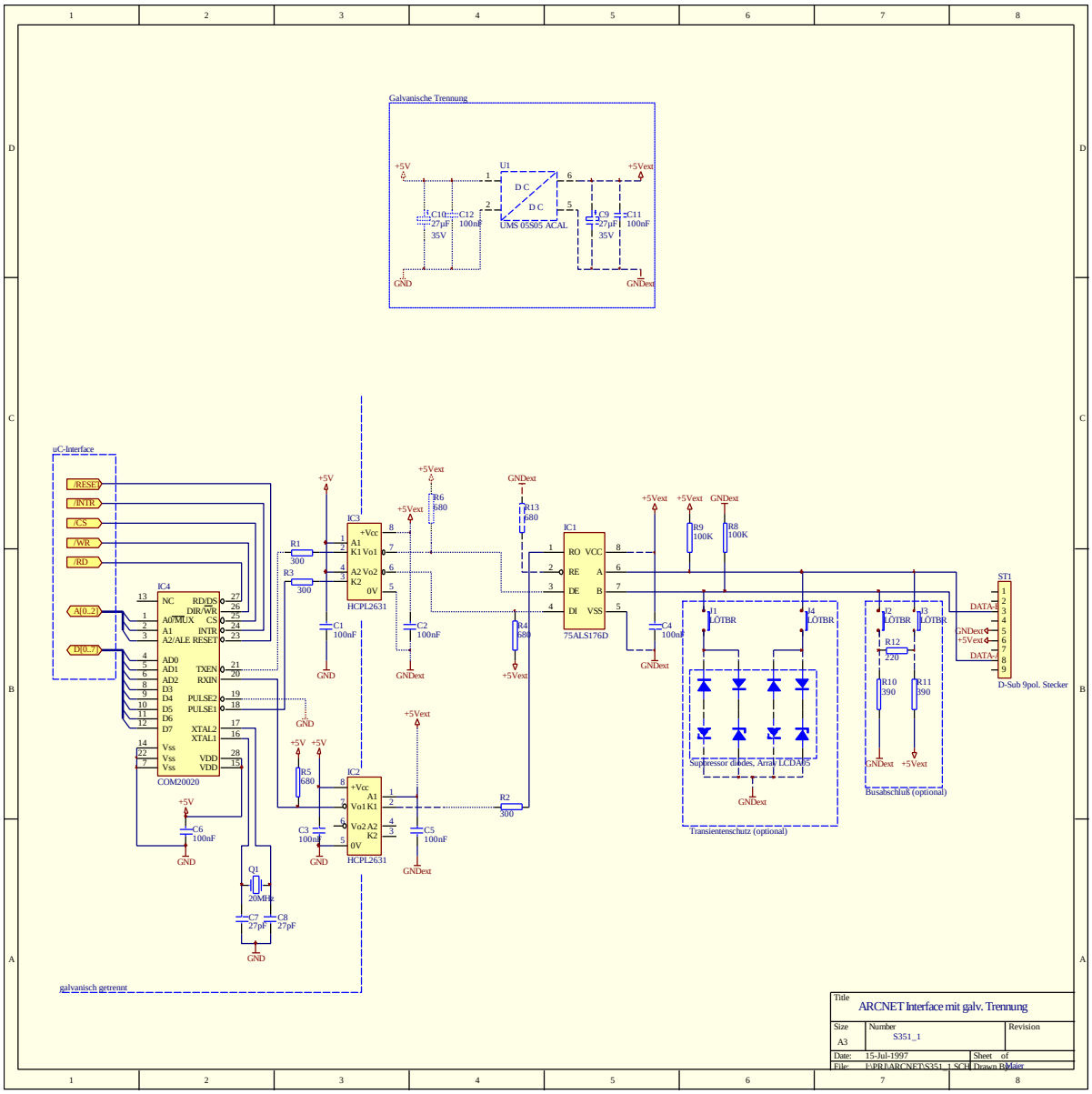

9.5.2.4.1 Components

Number	Reference	Designation	Type	Value
1	IC1	RS485 transceiver	SN75ALS176D	
2	IC2, IC3	opto coupler	HCPL2631	
1	IC4	ARCNET controller	COM20020	
1	Q1	Crystal oscillator		20MHz
1	ST1	Connector	SUB-D 9-pin connector	
1	U1	DC/DC converter	UMS 05S05	
1		Suppressor diodes	array LCDA05	

9.5.2.4.2 Wiring

2 x 2 : 1 twisted pair for data signals A, B and

1 twisted pair for repater control signals A, CNTR-B

9.5.2.5 Circuit Layout of the Repeater Control based on RS485

It has to be considered that repeater control based on RS 485 is only possible if all bus participants are equipped for this purpose.

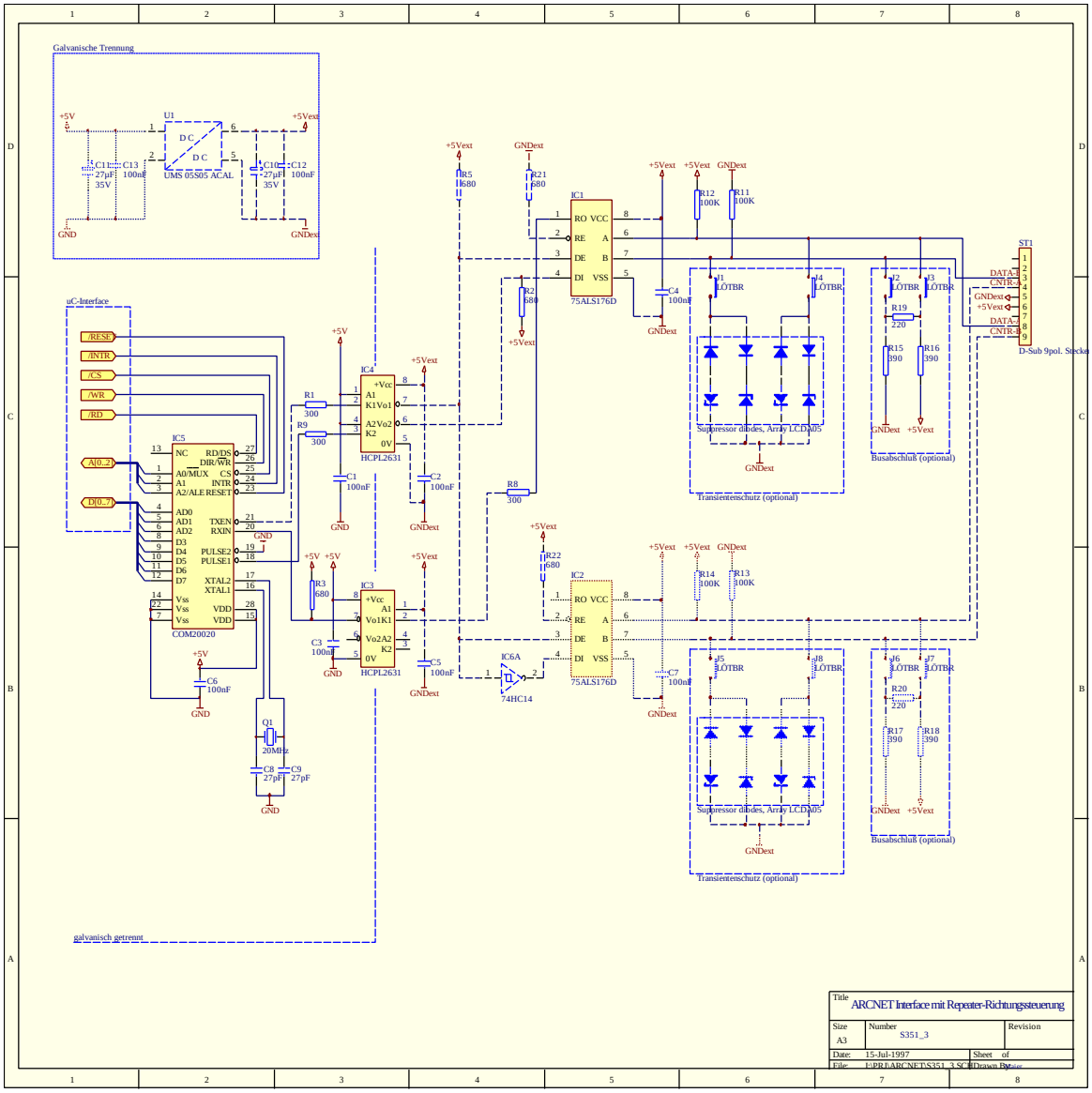

9.5.2.5.1 Components

Number	Reference	Designation	Type	Value
2	IC1, IC2	RS485 transceiver	SN75ALS176D	
2	IC3, IC4	opto coupler	HCPL2631	
1	IC5	ARCNET controller	COM20020	
1	IC6A	Hex Schmitt-trigger inverter	MC74HC14	
1	Q1	Crystal oscillator		20MHz
1	ST1	Connector	SUB-D 9-pin connector	
1	U1	DC/DC converter	UMS 05S05	
2		Suppressor diodes	array LCDA05	

9.5.2.5.2 Cabling

2 x 2 +3 : 2 x 2 wires, twisted pairs for data signals A, B,

and control signals CNTR-A, CNTR-B and

1 additional wires for data reference potential DGND,

2 additional wires for auxiliary voltage supply RP-P, RP-N

(without galvanic isolation for the bus participants compensation current has to be considered)

10 Appendix

10.1 Definitions

Term	Definition	Comment
TTL - H	voltage level > 2.4 V	
TTL - L	voltage level < 0.8 V	
Logical 0	signal level at the ARCNET bus if there is no activity [5]	_pulse1 output of the COM20020 = TTL-H [1]
Logical 1	signal level at the ARCNET bus when activity begins [5].	_pulse1 output of the COM20020= TTL- L [1]
Bit length	the total time for the transmission of a bit	400 ns at 2.5 Mbit/s
Mbit/s kBit/s	number of transmitted bits per second. "M" means 1E06, "k" means 1000.	
Bitjitter	The time deviation of the real signal ralted to the basic time grid for bits. It is defined as a fraction of a bit length.	

10.2 Literature

Siemens "Optokoppler Lichtschranken Lichtleiter-Bauelemente". Order number B349-B6039

Honeywell OPTOELECTRONICS data sheet "HFX6015 xxx 660 nm LED for Industrial Bus Systems"

Honeywell OPTOELECTRONICS data sheet "HFD3403-2xx 5Mb/s Receiver for Industrial Bus Systems"

10.3 Referenced Documents

Document	Reference	Version	Date
Data sheet COM20020 by SMC	[1]	2	7/20/92
Data sheet HY 9088A by SMC	[2]	9/4/92	9/4/92
ARCNET Designer´s Handbook, Dok Nr. 61610, by DATAPOINT	[3]	Edition 02	1988
Cabling Alternatives for the COM20020, COM90C66, AND COM90C165, SMC	[4]	D	1/92
ARCNET Local Area Network Standard, by ATA Standards Commitee	[5]	1.6	5.1.1991
Proposal for a RS 485 Interface	[6]	00.02	8.10.96
Guide to Configuring an ARCNET Network by Contemporary Control Systems, Inc.			
RS-485 Cabling Guidelines for the COM20020 by SMC			May 1994

AUG - ARCNET user group e.V.

Bussardstr. 19

90766 Fürth

Germany

Tel. ++ 49 911 97341 24

Fax. ++ 49 911 97341 10

email: AUG@SOHARD.DE

Internet: WWW.ARCNET.DE

Take the lead with ARCNET!